REV	DESCRIPTION	DATE
A	ADDED ITEM 8, COIN NOTE, TORQUE NOTES	10/27/98
B	NEW SPRING FOLLOWER	10/28/98
C	LC0222C-7-MW WAS LC0922C-9-MW 4.250 CHROME BALL WAS ø7/32	2/19/01
D	ITEM 9 LC0142C-1-MW WAS LC0220-1MW1 ITEM 8 LC0322C-8-11 WAS LC0922C-7-MW	7/17/01
E	ADDED DIMENSIONED SHAPE	8/03/01
F	DWG NO. WAS 1A-0939	9/13/01

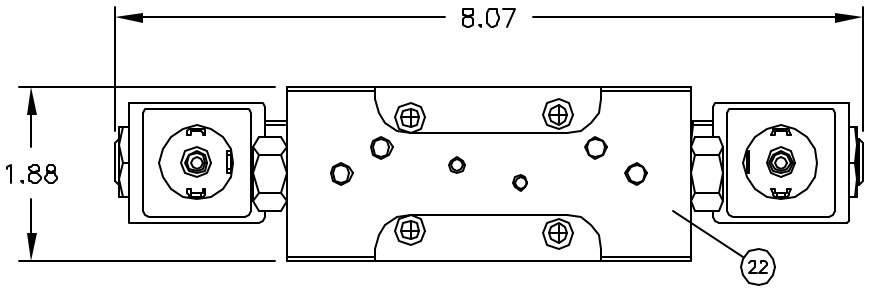

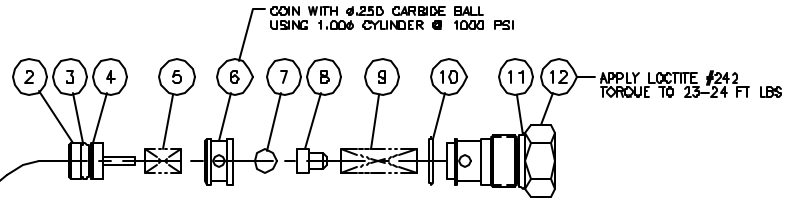

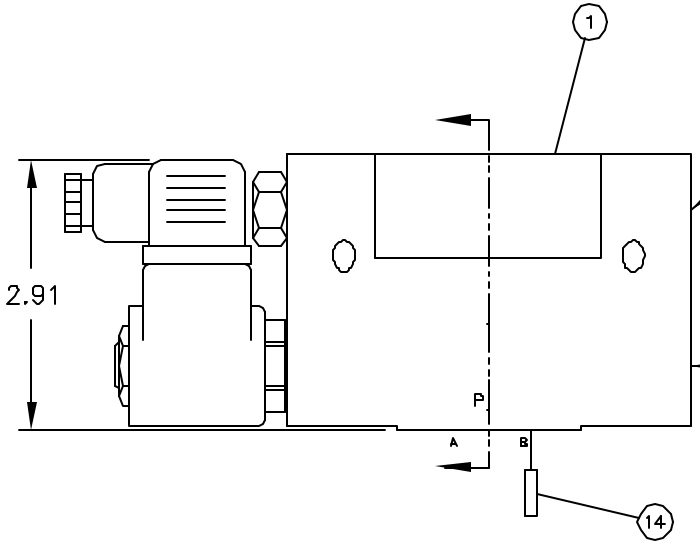

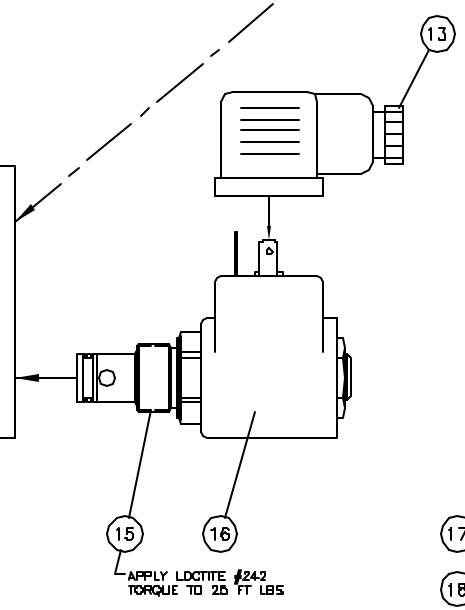

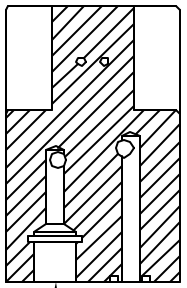

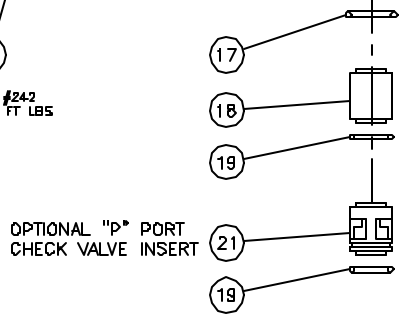

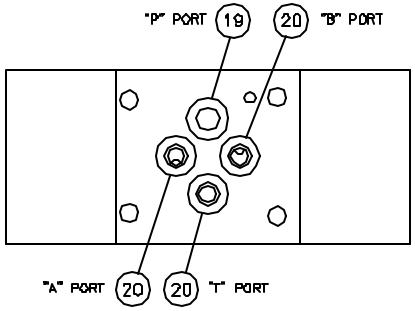

VOLTAGE	SOL P/N	SEAL MATL	SEAL CODE	VALVE P/N
12 VDC	6308012	EPR	E90	11013
		VITON	M83248	11014
		POLYURETHANE	9250	11015
24 VDC	6308024	EPR	E90	11016
		VITON	M83248	11017
		POLYURETHANE	9250	11018
115 VAC	6318115	EPR	E90	11019
		VITON	M83248	11020
		POLYURETHANE	9250	11021
230 VAC	6318230	EPR	E90	11022
		VITON	M83248	11023
		POLYURETHANE	9250	11024

ITEM	QTY	PART NUMBER	DESCRIPTION
22	1	NP010408-1	LABEL
21	REF	KCS-8-08-V03	CHECK VALVE
20	3	SO-011-(MATL)	O-RING
19	1	12.0x1.5-(MATL)	O-RING
18	1	10958	INSERT
17	1	SO-013-870	O-RING
16	2	(SEE CHART)	SOLENOID
15	2	SF08-20-0-P-0	2-W POPPET VALVE
14	1	1/8 x 1/2	SPRING PIN
13	REF	812 DIN 43850	CONNECTOR, DIN
12	2	10379	SPRING/POPPET GUIDE
11	2	SO-908-(MATL)	O-RING
10	2	SO-012-(MATL)	O-RING
9	2	LC-0330-0-MW	SPRING
8	2	10332	SPRING FOLLOWER
7	2	8.250	CHROME BALL
6	2	10633	POPPET SEAT
5	2	LC-0420-01-MW	SPRING
4	2	010 PTFE	SPLIT BACK-UP RING
3	2	SO0010-(MATL)	O-RING
2	2	10631	PISTON
1	1	10256	BODY

INTERFACE DEVICES, INC.
230 BENT ROAD
MILFORD, CT 06460

SCALE FULL	TITLE ASSEMBLY, 6K SOL POPPET 4-W VALVE
DRAWN BY WNI	
DATE 10/19/98	REF DO3-4WPSV
SHT 1 OF 1	DWG NO. VO3-1002 REV E

Z:\PROGRAMS\ACADVER\VALVES\VO3-APPV\VO3-1003-E.DWG Plotted: Mar 18, 2003 11:38AM